ASSEMBLY INSTRUCTIONS

ITEM CODE : **IN 3613**

ITEM DESCRIPTION : **CONSOLE TABLE**

1

Reverse the console table & place the leg as shown & align the leg to match the apron.

2 **the leg with the console table top and tighten the nut with the washer as shown in fig1**

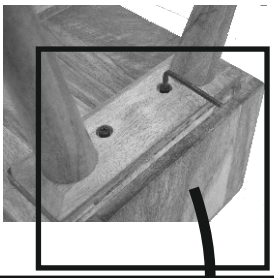

3

Fix the other leg pair in the similar way

4
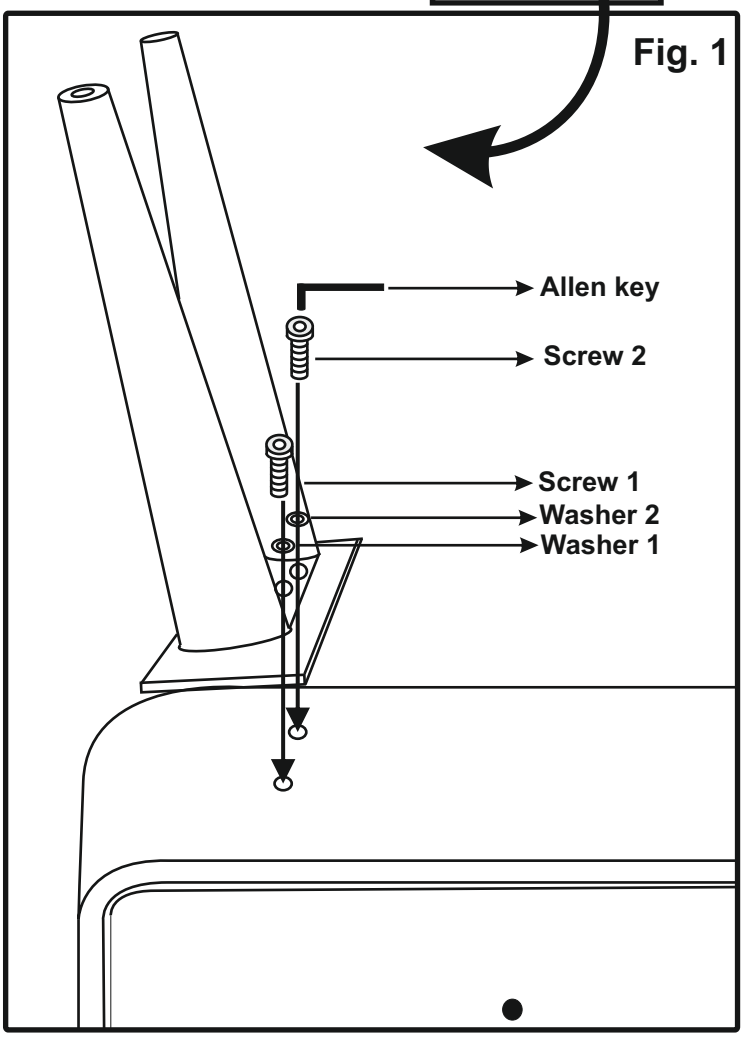
Reverse the console table straight. Now your console table is ready for use.