ASSEMBLY INSTRUCTIONS

ITEM CODE : IN 3316

ITEM DESCRIPTION : Vanity Table in chestnut

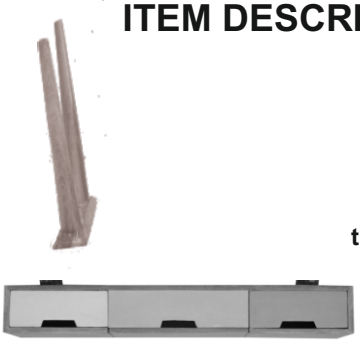

1

Reverse the table & place the leg as shown & align the leg to match the apron.

Insert the Bolt to fix the leg with the table top and tighten the nut with the washer as shown in fig1

2

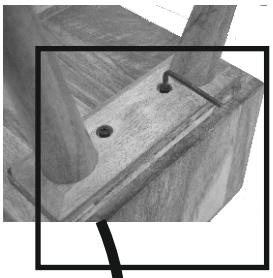

3

Fix the other leg in the similar way

Reverse the table straight. Now your table is ready for use
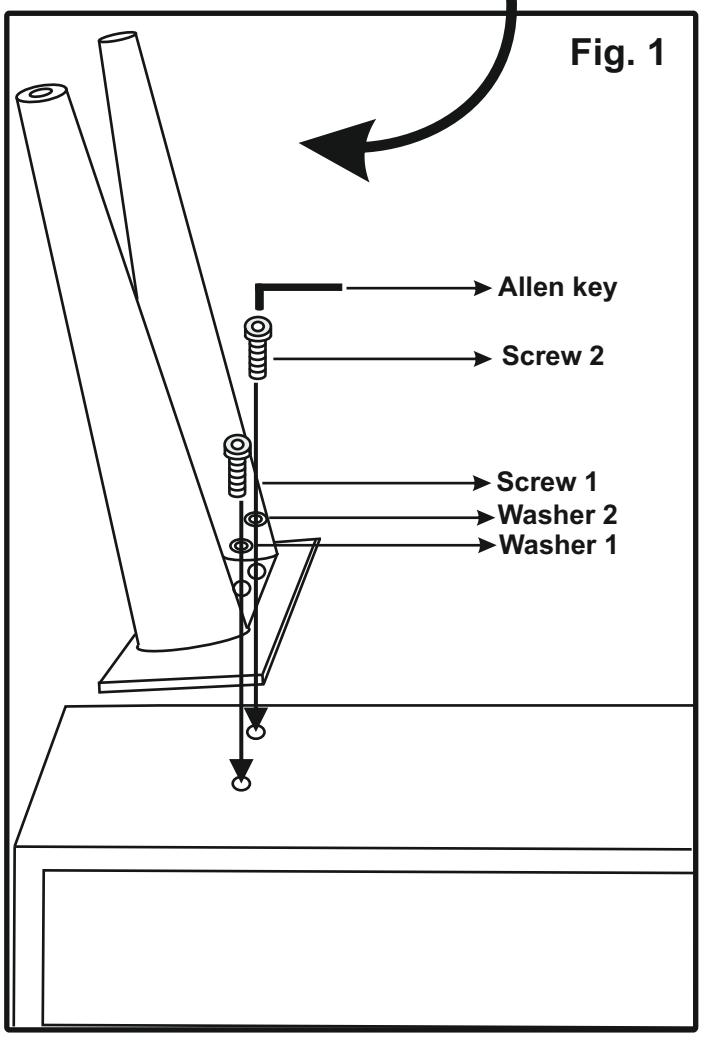
4